SECURITY TRONIX

THE IMAGE OF QUALITY

INSTALLATION MANUAL

ST-DLI540IR –B –W

Plastic Indoor Infrared Dome Color Camera

PACKAGE CONTENTS

This package contains:

One ST-DLI540IR-B-W plastic indoor infrared dome color camera
One installation manual

Note: The ST-DLI540IR-B-W requires a minimum 12VDC 400mA power supply such as the ST-PS12VDC1A or ST-PS12VDC2A.

PRODUCT DESCRIPTION

The ST-DLI540IR-B-W is a plastic indoor infrared dome color camera designed around a 1/3" Color SONY CCD with 540TVL of resolution and 24 infrared LEDs providing infrared capability up to 65 feet. The camera's size and packaging allow it to be easily and discretely installed. Its rich color, high definition, stability and resistance to jamming make it attractive for CCTV security applications.

SPECIFICATIONS

ST-DLI540IR-B-W

Specifications (Typical)

1. Image Sensor	1/3" SONY CCD
2. Pixels (HxV)	768x494
3. Scanning System	NTSC
4. Horizontal Resolution	540TV Lines
5. Synchronization	Internal, Negative Synch
6. Minimum Illumination	0.001Lux, 0Lux (IR LED on)
7. Scanning System	2 :1 interface
8. Auto Electronic Shutter	1/60s ~ 1/100,000s
9. Auto Gain Control	Automatic
10. Lens	3.6mm/F2.0 board lens
11. S/N Ratio	>48dB
12. IR LED	ϕ5x24PCS
13. IR Viewing Distance	Up to 65 feet
14. IR Status	Under 10Lux by CDS
15. IR Power On	CDS Auto Control
16. Gamma Characteristic	0.45
17. Video Output	1.0Vp-p/75Ω
18. Operation Temperature	14°F - 113°F
19. Power Supply	DC12V 400mA
20. Dimensions	3.7"x2.7"
21. Weight	0.55 lbs

INSTALLATION AND OPERATION

This symbol is intended to alert the user to the presence of important operating and maintenance (servicing) instructions.

This symbol is intended to alert the user to the presence of uninsulated “dangerous voltage” within the product’s enclosure that may be of sufficient magnitude to constitute a risk of electrical shock.

CAUTION: To reduce the risk of electrical shock do not remove the cover or back of this unit. No user serviceable parts are inside.

CAUTION: To prevent electric shocks and risk of fire hazards, do not use other than specified power source.

1. UNPACKING and HANDLING

Each unit is shipped assembled and factory tested.

Ensure that all accessories are removed from the container before discarding packing material

2. MECHANICAL INSPECTION

Inspect the front and rear of the equipment for shipping damage. Make sure the equipment is clean, and no connectors are broken, damaged, or loose. If equipment appears to be damaged or defective please contact your distributor or SecurityTronix at 1-610-429-1511 for assistance.

3. SPECIAL ATTENTION

a. The installer must comply with electrical safety standards. There must be sufficient space between the camera’s power supply and video line and any high voltage equipment and/or cables.
b. To help ensure the camera’s life and proper operation do not point the camera towards the sun or strong light.
c. Do not install the camera in an environment where the temperature is above 113° F.
d. Do not install the camera near a magnetic field or a high-power motor.
e. Do not mount the camera near a radiator or heater.
f. Only use a dry cloth to clean the camera. If there is dirt that is difficult to remove wipe gently with a mild detergent. Never use strong or abrasive detergents.
g. A minimum 12VDC 400mA power supply must be used. AC power cannot be applied. Using an AC or other incorrect power supply will damage the camera.
h. Only qualified installers are allowed to install, test and disassemble the camera.
i. The IR LED angle and lens viewing range are adjusted at the factory. Any change to the camera’s lens will affect image quality.
j. The camera is a low voltage product designed for indoor use. If installed outdoors proper safety and lightening grounding are required.

4. WIRING CONNECTIONS

a. Connect the power supply's DC plug to the camera's power outlet.
b. Connect the camera to the monitor with a 75Ω coaxial video cable.
c. Connect power supply's AC plug to a suitable AC power outlet.
d. Adjust the lens direction according to the required surveillance area and environment.

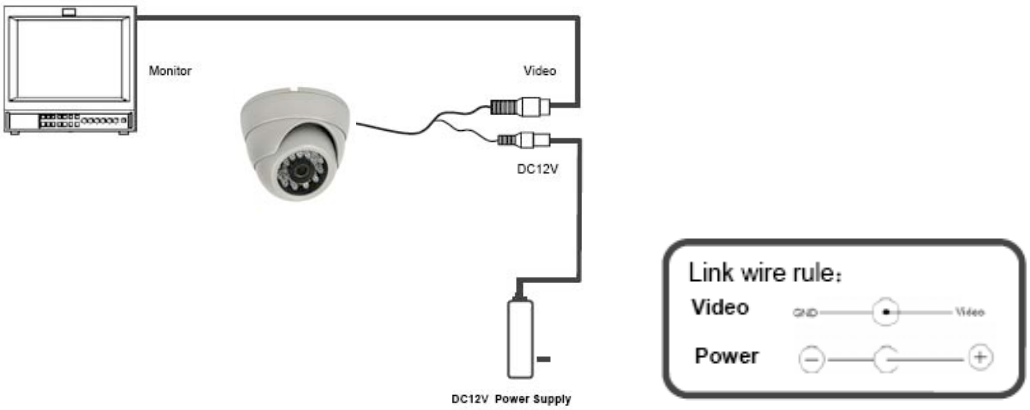

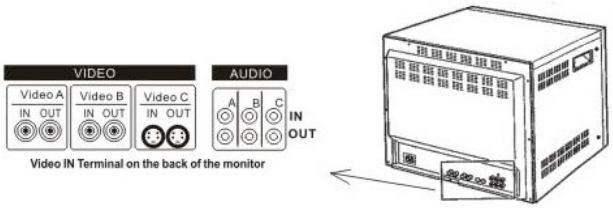

5. TROUBLESHOOTING

a. No picture after applying power – (i) check all plugs and cables are securely connected to the proper connectors; (ii) ensure your power supply is providing the correct voltage and current.
b. The picture has ripples – (i) check to see if the power supply is experiencing AC ripple, if so a filter may be required; (ii) determine if the monitor is faulty; (iii) determine if other peripheral equipment is causing ripple and if so make the necessary adjustments.
c. The picture background continuously changes color – a fluorescent lamp's magnetic field may cause color roll, therefore, reduce the number of fluorescent lamps or increase the distance between the camera and the lamps.
d. The picture appears smeared – (i) the power supply voltage level may be unstable, therefore, try another power supply; (ii) ensure the cables are correctly connected and/or the cables are of the correct impedance.
e. Other interference may require a SecurityTronix ground loop isolation filter.
f. Additional troubleshooting assistance can be found on-line at www.securitytronix.com in addition to support from SecurityTronix sales engineers at 1-610-429-1511.