IP-POE24M Hardware Installation Manual

Table of Contents

Chapter 1 IP-POE24M Switch 1
1.1 Standard Configuration 1
1.2 Characteristic Parameters of IP-POE24M 3
1.3 ROHS Description 4
Chapter 2 Installation Preparation 5
2.1 Cautions 5
2.2 Safety Advice 5
2.2.1 Safety Principles 5
2.2.2 Safety Notices 5
2.2.3 Safety Principles for Live Working 6
2.2.4 Electrostatic Discharge Prevention 6
2.3 Requirements for Common Locations 7
2.3.1 Environment 7
2.3.2 Location Configuration Prevention 7
2.3.3 Cabinet Configuration 7
2.3.4 Power Requirements 8
2.4 Installation Tools and Device 8
Chapter 3 Installing the IP-POE24M Switch 9
3.1 Installation Flow of IP-POE24M 9
3.2 Installing the Chassis of the Switch 9
3.2.1 Installing the Machine Box on the Desk 10
3.2.2 Installing the Chassis on the Cabinet 10
3.3 Connecting the Port 10
3.3.1 Connecting the Console Port 10
3.3.2 Connecting Fast-Ethernet Interface 12
3.3.3 Connecting the 1000M Ethernet Port 14
3.4 Checking After Installation 16
Chapter 4 Maintaining the Switch 17
4.1 Opening the Chassis 17
4.2 Closing Chassis 18
Chapter 5 Hardware Fault Analysis 19
5.1 Fault Separation 19
5.1.1 Faults Relative with Power and Cooling System 19
5.1.2 Faults Relative with Port, Cable and Connection 19
5.2 Indicator Description 19

Chapter 1 IP-POE24M Switch

This document describes the characteristics and parameters of the IP-POE24M and gives an overview of IP-POE24M physical interfaces.

1.1 Standard Configuration

The accessory ports of the IP-POE24M is composed of 24 fast-Ethernet ports, four 1000M optical/electrical ports and one console port. See table 1-1.

Table 1-1 Attributes of the necessary port

Port	Attribute
fast-Ethernet POE port	An port, which has a 10/100M auto-adaptation, MDI/MDIX auto-identification for cable, UTP(RJ45) port and the LINK/ACT 100Mbps indicators. Each fast-Ethernet port has the POE function. Each port can provide the outside up to 30W power consumption and the total power consumption reaches 400W.
1000M optical/electrical port	Electrical port: 10/100/1000M auto-adaptation, MDI/MDIX auto-identification of cable, UTP(RJ45) port and the LINK/ACT indicators SFP port: having LINK/ACT indicators
Console port	An RJ45 port with a rate of 9600 bps

Additionally, IP-POE24M has a grounding column, a socket and a power switch at its rear panel.

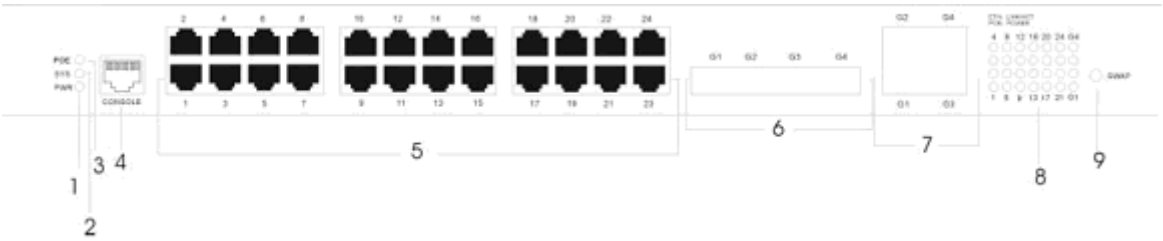

Figure 1-1 Front template of the IP-POE24M switch

Table 1-2 Parts at the front template of the IP-POE24M switch

No.	Abbrev.	Name	Description
1	PWR	Power indicator	If the switch is powered on, the indicator is on.
2	SYS	System indicator	If the indicator is always on, the system is being started.

			If the indicator flickers, the system works normally.
3	POE	POE指示灯POE indicator	If the POE indicator is on, it means that 24 indicators on the right side show the state of the POE port.
4	CONSOLE	Console port	Manages the switch locally.
5	1-24	24 electrical port with the POE function	Forward the 10/100M Ethernet electrical signals and provide POE function. Their peers can be connected to the PD devices which satisfy the IEEE 802.3af standard.
6	G1-G4	Gigabit-Ethernet optical port	Forwards the 1000M Ethernet optical signals.
7	G1-G4	Gigabit-Ethernet electrical port	Forwards the 10/100/1000M Ethernet electrical signals.
8	LINK/ACT	Normal mode of the indicator: indicating the LINK/ACT state of each port POE mode of the indicator: indicating the POE power supply state of each port	Normal mode: If the indicator is always on, the link on the port is normal. If the indicator flickers, the data is received or transmitted through the port. POE mode: If the indicator is always on, the port is powered through the POE mode. If the indicator is off, the port is not supplied with power.
9	SWAP	A shift key for exchanging the normal mode with the POE mode of the indicator	If you press the shift key in normal mode, the indicator will enter the POE mode. If you press again, the indicator will enter the normal mode again. If you leave the key alone for 30 seconds in POE mode, the indicator automatically enters the normal mode.

Figure 1-2 Rear template of the IP-POE24M switch

Table 1-3 Parts at the rear template of the IP-POE24M switch

No.	Abbrev.	Name	Description
1	None	Grounding column	Properly ground the system.
2	None	Power switch	**ON** means activating power, while **OFF** means disabling power.
3	None	AC power socket	AC100-240V

1.2 Characteristic Parameters of IP-POE24M

Protocol standard	IEEE 802.1d Spanning Tree Protocol IEEE 802.1p Class of Service IEEE 802.1q tagged VLAN IEEE 802.3x Flow control IEEE 802.3ad Link aggregation IEEE 802.3af standard
Network management standard	RFC 1157 SNMP v1/v2 RFC 1213 MIB II RFC 1757 RMON 1,2,3,9
Memory	EPROM: 512k Bytes Flash Memory: 8M Bytes SDRAM: 64Mbytes
Standard configuration	24 10/100Base-TX ports One Console port Four fixed 1000M optical/electrical Ethernet ports
Specifications	442.50*315.00*44mm
Working temperature/humidity	0℃-60℃; 10%-85% no condensation
Storage temperature/ humidity	-40℃-80℃; 5%-95% no condensation
AC power supply	Input voltage: AC100-240V Input frequency: 47-63Hz Input current: 5A/230V
Power consumption	Up to 400W

1.3 ROHS Description

Parts	Toxic or harmful substances or elements					
	Pb	Hg	Cd	Cr(VI)	PBB	PBDE
Chasis	O	O	O	O	O	O
Rack	O	O	O	O	O	O
Baseboard	O	O	O	O	O	O
Module	O	O	O	O	O	O
Interface Card	O	O	O	O	O	O

O: The toxic or harmful substances' levels in each homogeneous materials of each part, are under the limitation of SJ/T 11363—2006 regulation

X: The toxic or harmful substances' levels at least in one homogeneous materials of one part, exceed the limitation of SJ/T 11363—2006 regulation

Chapter 2 Installation Preparation

2.1 Cautions

Similar to other electronic products, the semiconductor chip easily gets damaged if you power on and off abruptly and frequently. To restart the IP-POE24M, you have to toggle the power switch three or five seconds after the power is turned off.

Avoid severe collision or drops to the PoE switch.

Use correct outside ports to connect to the IP-POE24M. Do not insert the Ethernet plug into the console port (RJ45 8-line socket). Similarly, do not insert the console cable into the console port (RJ45 8-line socket).

Note:

1) When you insert or remove the power cable, keep the power line horizontal with the power socket.

2) When the lifetime of our products ends, handle them according to national laws and regulations, or send these products to our company for collective processing.

3) Caution: It is not recommended to connect the POE ports of two POE devices directly.

2.2 Safety Advice

2.2.1 Safety Principles

- ✧ Keep dustless and clean during and after the installation.
- ✧ Place the switch in a safe location.
- ✧ Put tools at the right place where they are not easily dropped.
- ✧ Put on relatively tight clothes, fasten ties or scarves well and roll up sleeves to avoiding snagging on the chassis.
- ✧ Use protective glasses if the environment may cause damage to your eyes.
- ✧ Avoid incorrect operations that may cause damage to devices or injuries.

2.2.2 Safety Notices

- ✧ Read the installation guide carefully before you operate the system.
- ✧ Only professionals are allowed to install or replace the switch.

- ✧ Pull out the AC power socket and close the direct-current power before operating on the chassis or working beside the power source.
- ✧ The final configuration of the switch must comply with relative national laws and regulations.

2.2.3 Safety Principles for working on a live switch

When working with live equipment, please follow these principles:

- ✧ Remove ornaments, such as rings, necklaces, watches and bracelets, before you operate on the switch. When metal articles connect the power to the ground, short circuit happens and components may be damaged.
- ✧ Pull out the AC power socket and close the direct-current power before operating on the chassis or working beside the power source.
- ✧ When the power is on, do not touch the power.
- ✧ Correctly connect the device and the power socket.
- ✧ Only professionals are allowed to operate and maintain the device.
- ✧ Read the installation guide carefully before the system is powered on.

Note:

- ✧ Check potential dangers, such as the humidity, ungrounded extension power cords and frayed power lines.
- ✧ Turn off the switch and remove the power line before installing or uninstalling the chassis or working beside the power.
- ✧ Do not work alone if potential dangers exist.
- ✧ Cut off the power before troubleshooting.
- ✧ If trouble happens, take the following measures:

A. Cut off the system's power.

B. Notify appropriate personnel.

C. Take proper measures to help persons who are injured

D. Seek medical help.

2.2.4 Electrostatic Discharge Prevention

Electrostatic discharge may damage devices and circuits. Improper treatment may cause the switch to malfunction completely or discontinuously.

Move or locate the devices according to the measures of electrostatic discharge prevention, ensuring the chassis connects the ground. Another measure is to wear a

static-proof hand ring. If there is no hand ring, use the metal clip with the metal cable to clip the unpainted metal part of the chassis. In this case, the static is discharged to the ground through the metal cable of the clip. You can also discharge the static to the ground through your body.

2.3 Requirements for Common Locations

This section describes the requirements for installation locations.

2.3.1 Environment

The switch can be installed on a desk or an equipment cabinet. The location of the chassis, cabinet planning and indoor cabling are very important for normal system function. Short distances between devices, bad ventilation and an untouchable control plate will cause maintenance problems, systematic fault and breakdown.

For location planning and device locating, refer to section 2.3.2 “Location Configuration Prevention”.

2.3.2 Location Configuration Prevention

The following preventive measures assist you to design the proper environment for the switch.

- ✧ Make sure that the workshop is well-ventilated, the heat of electrical devices is well-discharged and sufficient air circulation is provided for device cooling.
- ✧ Avoid damage to devices by following electrostatic discharge prevention procedures.
- ✧ Put the chassis in a place where cool air can blow off the heat inside the chassis. Make sure the chassis is sealed because the opened chassis will reverse the cool air flow.

2.3.3 Cabinet Configuration

The following content describes a proper cabinet configuration:

- ✧ Each device on the cabinet gives off heat when it runs. Therefore, the sealed cabinet must have a heat-discharge outlet and the cooling fan. Do not put the devices too close, avoiding bad ventilation.
- ✧ When you install the chassis in an open cabinet, prevent the frame of the cabinet from blocking the airway of the chassis.
- ✧ Ensure that proper ventilation is provided for the devices installed in the bottom of the cabinet.
- ✧ The clapboard separates exhaust gas and inflow air, and boost the cool air to flow in the chassis. The best location of the clapboard is decided by the

air flow mode in the chassis, which can be obtained through different location tests.

2.3.4 Power Requirements

Make sure that the power supply has proper grounding and the power at the input side of the switch is reliable. The voltage control can be installed if necessary. At least a 240 V, 10A fuse or a breaker is provided in the phase line if you prepare the short-circuit prevention measures for a building.

Caution:

If the power supply system does not have good grounding, or the input power disturbs too much and excessive pulses exist, the error code rate of communication devices could increase, and potentially cause hardware failure.

2.4 Installation Tools and Device

The tools and devices to install the IP-POE24M switch are not provided by the IP-POE24M switch. You yourself need to prepare them. The following are the tools and devices needed for the typical installation of the IP-POE24M switch:

- ✧ Screwdriver
- ✧ Static armguard
- ✧ Bolt
- ✧ Ethernet cable
- ✧ Other Ethernet terminal devices
- ✧ Control terminal

Chapter 3 Installing the IP-POE24M Switch

Caution:

Only professionals are allowed to install or replace the IP-POE24M.

3.1 Installation Flow of IP-POE24M

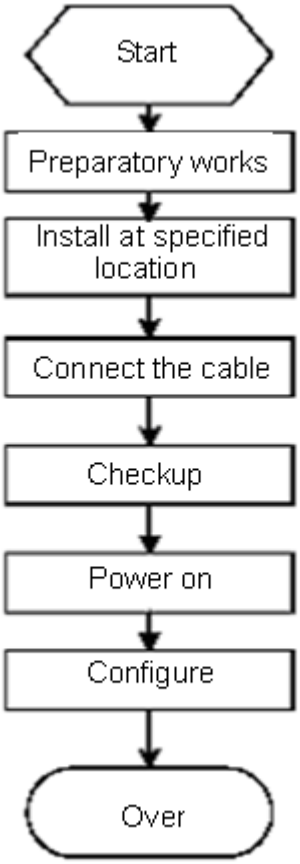

3.2 Installing the Chassis of the Switch

The chassis of the switch can be installed on the desk or can be fixed to other cabinets. Your network installation requirements can be met if you conduct the operations according to the following procedure.

- ✧ Installing the switch on a desk
- ✧ Installing the Chassis in an equipment cabinet

3.2.1 Installing the Machine Box on the Desk

The IP-POE24M switch can be directly put on smooth and safe desk.

Note:

Do not put things weighing 4.5 kg or over 4.5 kg on top of the switch.

3.2.2 Installing the Chassis on an equipment Cabinet

The chassis of the switch is fixed to the cabinet with the brackets. When you fix the brackets, the front template of the switch faces forward. The detailed operations are shown in Figure 3-1.

Figure 3-1 Fixing the machine box of the switch

After the brackets are installed, install the switch on the cabinet. See Figure 3-2.

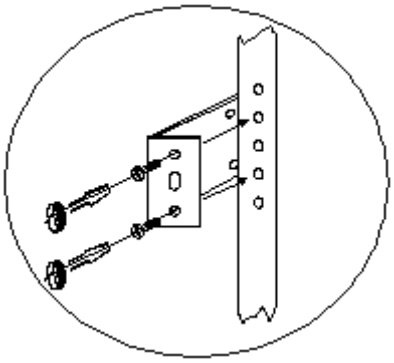

Figure 3-2 Installing the switch on the cabinet

3.3 Connecting the Port

3.3.1 Connecting the Console Port

The switch of IP-POE24M has a Console port.

The rate of the console port is a value ranging from 1200bps to 115200bps. It has a standard RJ45 plug. After you connect the console port to the serial port of a PC

through a console cable, you can configure and monitor the switch of IP-POE24M by running a terminal emulation software, such as super Windows terminal. The cable is provided according to the host. The communication parameters of the terminal serial port can be set to a rate of 9600bps, eight data bits, one stop bit, no sum check bit and traffic control.

The RJ45 connector of the console port is shown in the following figure. The RJ45 plug corresponds to the RJ45 socket, whose pins can be aligned from left to right with the value from 1 to 8.

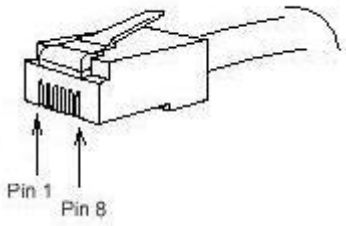

Figure 3-3 RJ-45 connector of the console port

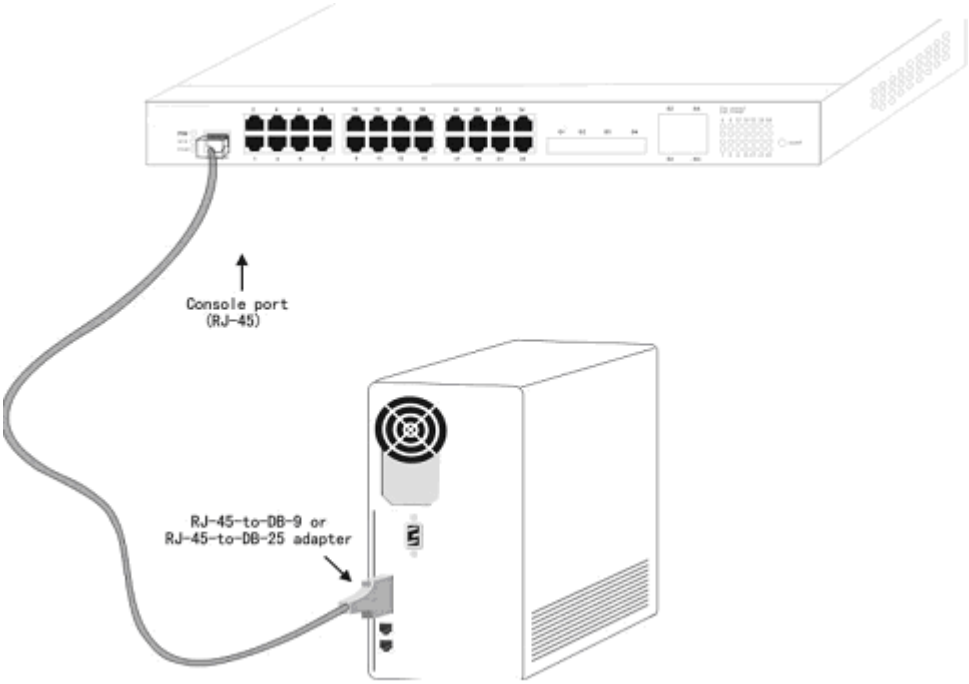

Figure 3-4 Connecting the console port of IP-POE24M and computer

Table 3-1 Definition of the pins of the UTP port

No.	Name	Symbol	Remarks
1	Carrier Detecting	CD	No connect
2	Data receiving	RXD	Input
3	Data-line device ready	DSR	No connect

4	Data transmitting	TXD	Output
5	Transmission requesting	RTS	No connect
6	Response transmitting	CTS	No connect
7	Data terminal ready	DTR	No connect
8	Signal ground	SG	GND

Note:

The console port of the IP-POE24M switch does not support traffic control. Therefore, you must set the option **data traffic control** to **none** when you configure the switch with the super terminal.

Otherwise, the single-pass problem will arise on the super terminal. The cable is used to connect the console port of the IP-POE24M switch and the outside console terminal device. One end of the cable is a 8-pin RJ45 plug and the other end is a 9-hole plug (DB9). The RJ45 plug is put into the socket of the console port on the IP-POE24M switch. The inner line connection in the cable is shown in figure 3-1. The console cable is numbered as RLC0301.

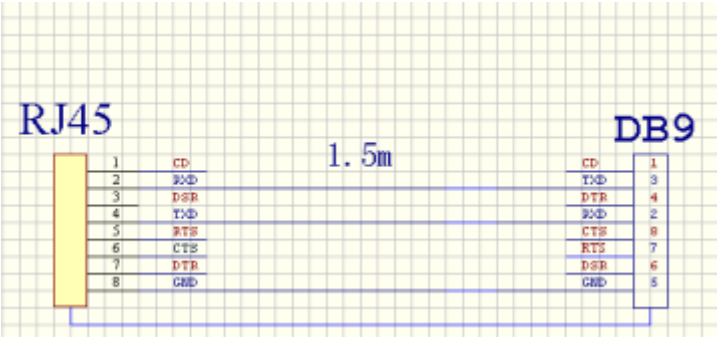

Figure 3-5 Cable connection at the console port

3.3.2 Connecting Fast-Ethernet Interface

The IP-POE24M switch has 24 10/100Base-TX ports. The indicators are in the right side of the front panel of the switch, indicating the LINK/ACT state. You can connect other Ethernet terminal devices to the UTP port through a straight through or cross network cable. The numbering order of the pins in the UTP port is the same as the console port.

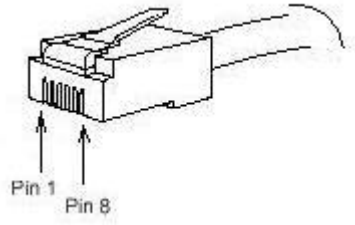

Figure 3-6 RJ-45 connector of the console port

Because 24 10/100Base-TX ports of IP-POE24M support the MDI/MDIX auto-identification of the cable, IP-POE24M can adopt five classes of direct-through/cross network cables when it connects other Ethernet terminals.

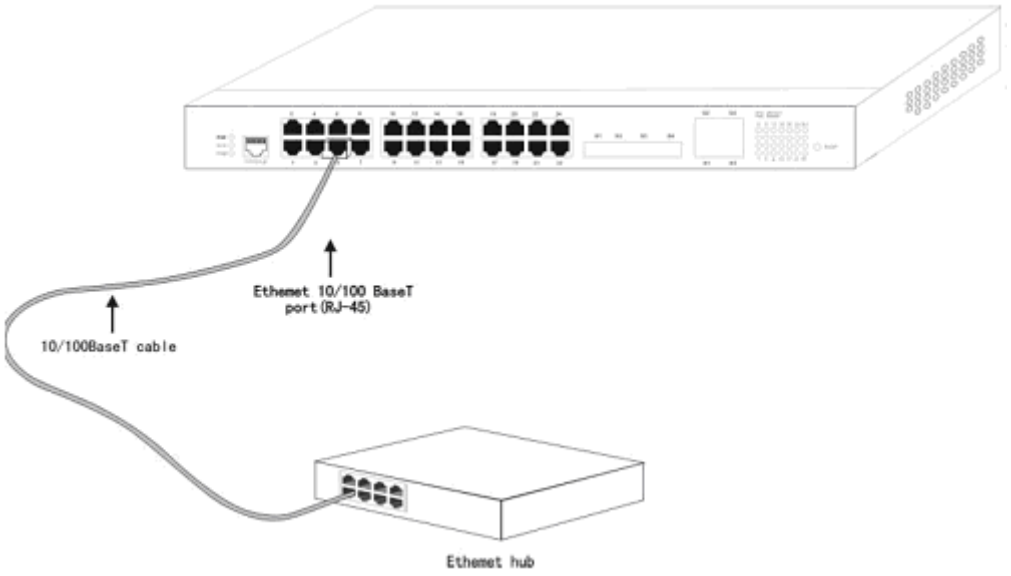

Figure 3-7 Connecting the 10/100Base-TX port and other Ethernet terminals

Table 3-2 Definition of the pins of the UTP port

No.	Name	Symbol	Remarks
1	Sending the normal phase of the data	TPTXD+	Output
2	Sending the paraphase of the data	TPTXD-	Output
3	Receiving the normal phase of the data	TPRXD+	Input
6	Receiving the paraphase of the data	TPRXD-	Input

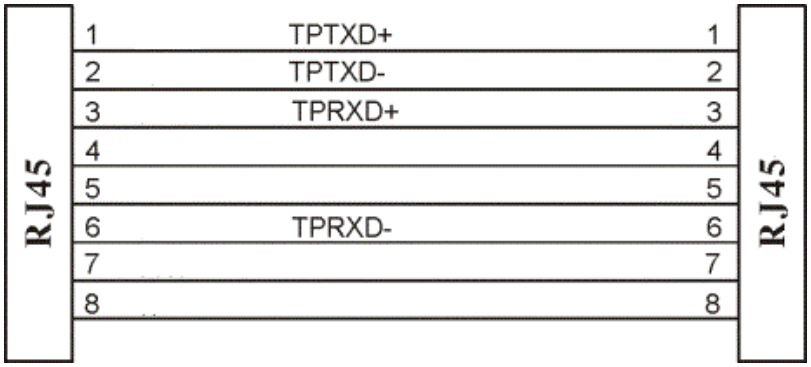

Figure 3-8 Connection method for five classes of direct-through cables

Note: The colour arrangement complies with EIA/TIA 568A.

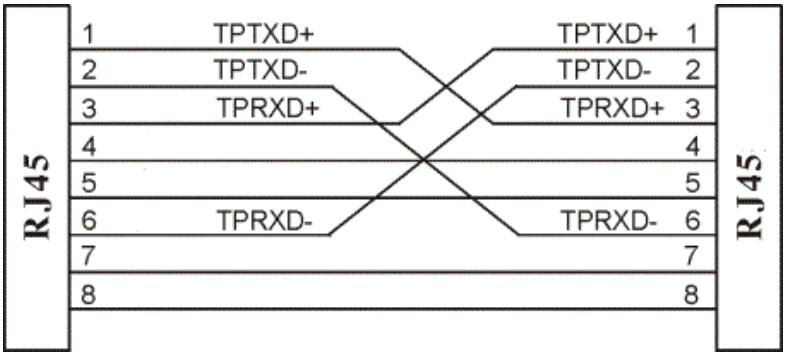

Figure 3-9 Connection method for five classes of cross cables

Note: The definition of the cable's color complies with EIA/TIA 568A.

3.3.3 Connecting the 1000M Ethernet Port

IP-POE24M provides four fixed 1000M optical/electrical Ethernet port. The indicators on the right side are LINK/ACT lights.

To use the optical port, you need insert the SFP module to the port and then connect other Ethernet devices through the optical fiber cable. If the port is inserted with the SFP module, the corresponding electrical port cannot be used.

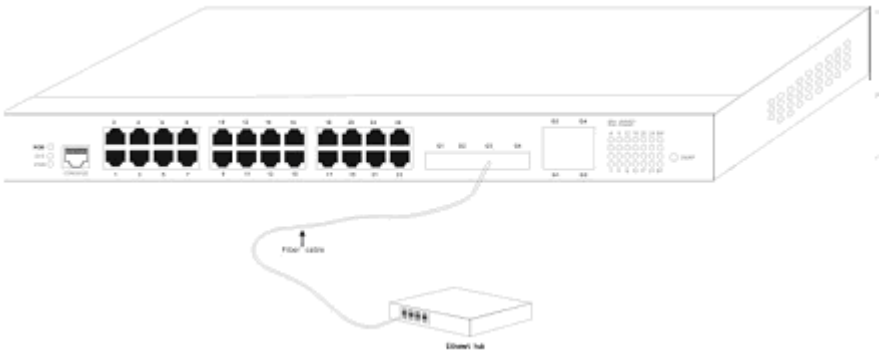

Figure 3-10 Connecting the 1000M optical port and other switches

To use the electrical port, you can connect the electrical port and other Ethernet devices with the direct-through or cross cable through the UTP port. In this case, the corresponding optical port cannot be used. The numbering order of the pins in the UTP port is the same as the console port.

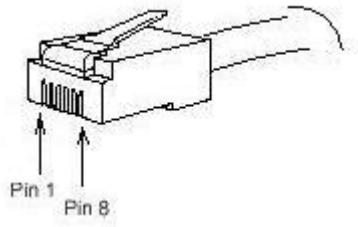

Figure 3-11 RJ-45 connector of the console port

Because 4 10/100/1000Base-T ports of IP-POE24M support the MDI/MDIX auto-identification of the cable, IP-POE24M can adopt five classes of direct-through/cross network cables when it connects other Ethernet terminals.

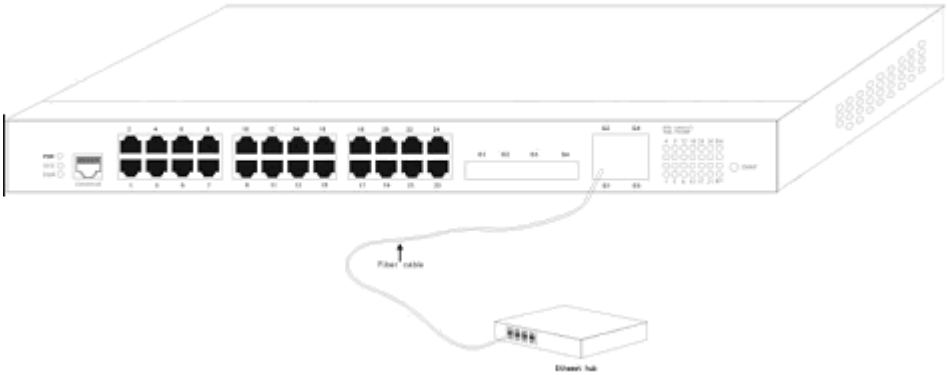

Figure 3-12 Connecting the 1000Base-TX port and other Ethernet terminals

Table 3-3 Definition of the pins of the 1000M RJ45 port

No.	Pin Name	Symbol	Remarks
1	Sending the normal phase of the data	TXD1+	Output
2	Sending the paraphase of the data	TXD1-	Output
3	Receiving the normal phase of the data	RXD1+	Input
4	Sending the normal phase of the data	TXD2+	Output
5	Sending the paraphase of the data	TXD2-	Output
6	Receiving the paraphase	RXD1-	Input

	of the data		
7	Receiving the normal phase of the data	RXD2+	Input
8	Receiving the paraphase of the data	RXD1-	Input

The direct-through or cross network cable has the function of auto-identification, so the five classes of direct-through/cross network cables can be used to connect other Ethernet devices.

3.4 Checking After Installation

Before starting up the switch, perform the following checks after the switch is installed:

- ✧ If the switch is installed on a cabinet, check whether the installation point between the cabinet and the switch is strong. If the switch is installed on a desk, check whether there is enough space for the switch to discharge its heat and whether the desk is stable.
- ✧ Check whether the connected power meets the power requirements of the switch.
- ✧ Check whether the grounding line is correctly connected.
- ✧ Check whether the switch is correctly connected to other terminal devices.

Chapter 4 Maintaining the Switch

Caution:

- ✧ Before opening the chassis, make sure that you have released the static you carried and then toggle the power of the switch. Before operating any step in Appendix B, read the section “Safety Advice”.
- ✧ Before performing operations beside the power source or on the chassis, turn off the power switch and remove the power cable.

4.1 Opening the Chassis

This section describes how to open the cover of the switch, required tools and operation methods.

Caution:

When the power cable is still connected to a power source, do not touch it.

When you open the cover of the switch, you may use the following tools：

- ✧ Screwdriver
- ✧ Static armguard

Perform the following steps to open the cover of the switch:

- ✧ Turn off the power to the switch.
- ✧ Remove all cables connected the back of the switch.
- ✧ Take out the bolt from the chassis with the screwdriver.

Note:

The chassis comprises of two parts: cover and bottom.

- ✧ Open the cover by holding two sides of the cover towards the direction of the arrow key shown in the following figure:

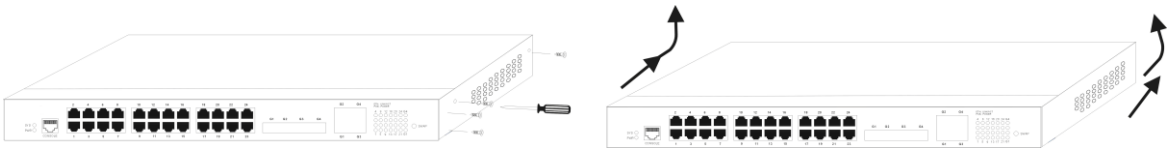

- ✧ When the cover is opened, put it aside. The main board of the system appears.

Note:

After taking off the cover, put it horizontally and avoid it being crushed or damaged. Otherwise, the chassis will be hard to install.

4.2 Closing Chassis

The section mainly describes how to put the cover and close the chassis. Do as follows:

- ✧ Assemble them according to their locations and joint them together along their sides.

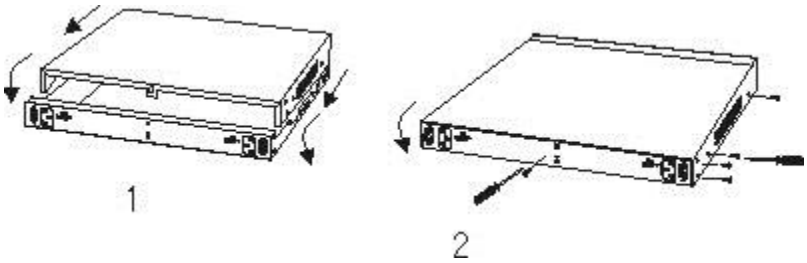

- ✧ See the following figure.
- ✧ When the cover and the bottom are closed, let the cover slide the slot of the front template at the bottom.
- ✧ Nail the bolt and screw it tightly with the screwdriver.
- ✧ Reinstall the switch on the cabinet or the desk.
- ✧ Reconnect all cables of the switch.

Chapter 5 Hardware Fault Analysis

The part describes how to remove the fault from the switch.

5.1 Fault Identification (Troubleshooting)

The key for resolving systematic faults is to separate the fault from the system. You can compare what the system is doing with what the system should do to detect the fault. You need to check the following subsystems:

- ✧ Power and cooling systems—power and fan
- ✧ Port, cable and connection—ports on the front plate of the switch and the cables connecting these ports

5.1.1 Faults Relative with Power and Cooling System

Do the following checks to troubleshoot power / cooling issues:

- ✧ When the power switch is at the “ON” location, check whether the fan works normally. If the fan does not work well, check the fan.
- ✧ If the switch is too hot, check whether the air outlet and air inlet are clean and then do relative operations in section 2.3 “Requirements for Common Locations”. The working temperature of the switch is from 0 to 40 Celsius degrees.
- ✧ If the switch cannot be started and the PWR indicator is off, check the power.

5.1.2 Faults Relative with Port, Cable and Connection

Do the following checkups to help remove the fault:

- ✧ If the port of the switch cannot be linked, check whether the cable is correctly connected and whether the peer connection is normal.
- ✧ If the power switch is at the “ON” location, check the power source and the power cable.
- ✧ If the console port does not work after the system is started up, check whether the console port is set to a baud rate of 9600 bps, eight data bits, no sum check bit, one stop bit and no traffic control.

5.2 Indicator Description

The LED indicator shows that the switch is running. The following table shows the indicators of the IP-POE24M switch and their description:

No.	Abbrev.	Name	Description
1	PWR	Power indicator	If the switch is powered on, the indicator is on.
2	SYS	System indicator	If the indicator is always on, the system is being started. If the indicator flickers, the system works normally.
3	LINK/ACT	Indicator of each port	If the indicator is always on, the link on the port is normal. If the indicator flickers, the data is received or transmitted through the port.